Construction Solutions

7918 East McClain Drive, Suite 1 Ph: (866) 270-8240
Scottsdale, AZ 85260 Fax: (480) 346-8250
www.dryersolutions.com

DBX1000 Recessed Vent Receptacle Installation Guidelines & Product Information

Material used in the DBX 1000 meets UL94 HB Flammability Testing and is recognized by Underwriters Laboratories Inc. Representative samples of this component have been evaluated by UL and meet applicable UL requirements.

For optimum results, install the **DBX1000** ® recessed vent receptacle for **4 Inch Walls** as follows:

Box Installation - 16 Inch On-Center Spacing:

1. Orient box to match desired venting direction, score & remove appropriate top or rear 4-inch oval vent pipe knock out. Allow minimum of 4 inches of vent of pipe to extend inside box
2. If gas line is to be installed, locate 1⅝ straw clamp on top of box. Cut the webs between the 8 fins with a utility knife. Push the gas line through the straw clamp. The fins will flex inward holding the pipe.
3. Slide box into position taking care to correctly align vent pipe and gas pipe (if present).
4. Spacing tabs will automatically position box so that bottom, inside edge is from **2¼ to 2⅝ inches above unfinished floor** to allow clearance between trim ring and finished floor covering. Tabs may be removed if a different spacing is desired.
5. Attach box directly to both right and left studs using the six flange screw holes. *Screws are recommended* for mounting.

Box Installation - 24 Inch On-Center Spacing:

1. Orient box to match desired venting direction, score & remove appropriate 4-inch oval vent pipe knock out. Allow minimum of 4inches of vent of pipe to extend inside box.
2. If gas line is to be installed, locate 1⅝ straw clamp on top or bottom of box. Cut the webs between the 8 fins with a utility knife. Push the gas line through the straw clamp. The fins will flex inward holding the pipe.
3. Slide box into position taking care to correctly align vent pipe and gas pipe (if present).
4. Spacing tabs will automatically position box so that bottom, inside edge is from **2¼ to 2⅝ inches above unfinished floor** to allow clearance between trim ring and finished floor covering. Tabs may be removed if a different spacing is desired.
5. Attach one side of box directly to stud using the three flange screw holes.
6. Snap in the two mounting straps on the other side of the box and attach these to the second stud using the strap screw holes. *Screws are recommended* for mounting.

Trim Instructions:

1. Snap out left or right trim ring "cut out" (see detail below).
2. **Leave 1¾ inches between inside edge of box and end of baseboard** to allow for trim ring clearance.
3. Snap trim ring into opening, no caulking required.
4. Leave unfinished or paint with desired color.

- Box made from High Impact Polystyrene ("HIPS")
- Meets UL94 HB Flammability Testing
- Install in up to 24" on center location, brackets included
- Easy to remove 4" oval knockouts
- Top and Bottom Straw clamps for gas pipe
- Snap on trim ring accommodates up to ¾" drywall
- US Patented Product 6,938,640

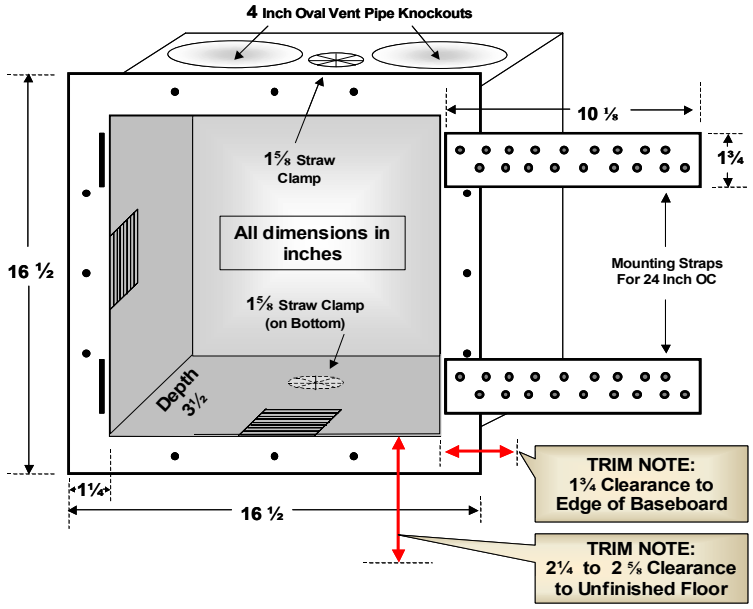

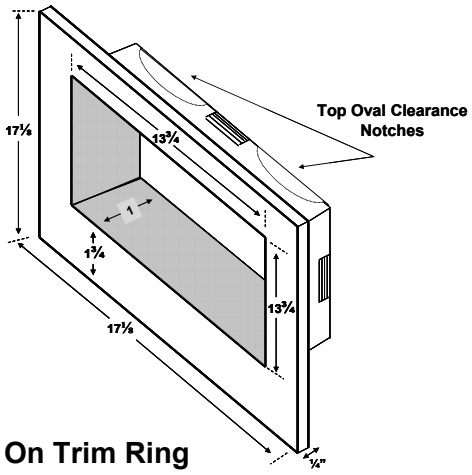

Snap On Trim Ring

Construction Solutions

7918 East McClain Drive, Suite 1 Ph: (866) 270-8240
Scottsdale, AZ 85260 Fax: (480) 346-8250
www.dryersolutions.com

DBX1000 Recessed Vent Receptacle
Installation Guidelines & Product Information

Material used in the DBX 1000 meets UL94 HB Flammability Testing and is recognized by Underwriters Laboratories Inc. Representative samples of this component have been evaluated by UL and meet applicable UL requirements.

For optimum results, install the **DBX1000** ® recessed vent receptacle for **6 Inch Walls** as follows:

Box Installation - 16 Inch On-Center Spacing:

6. Orient box to match desired venting direction, score & remove appropriate, top or rear, 4-inch vent pipe knock out. Allow minimum of 4 inches of vent of pipe to extend inside box
7. If gas line is to be installed, locate 1⅝ straw clamp on top of box. Cut the webs between the 8 fins with a utility knife. Push the gas line through the straw clamp. The fins will flex inward holding the pipe.
8. Slide box into position taking care to correctly align vent pipe and gas pipe (if present).
9. Spacing tabs will automatically position box so that bottom, inside edge is from **2¼ to 2⅝ inches above unfinished floor** to allow clearance between trim ring and finished floor covering. Tabs may be removed if a different spacing is desired.
10. Attach box directly to both right and left studs using the six flange screw holes. *Screws are recommended* for mounting.

Box Installation - 24 Inch On-Center Spacing:

7. Orient box to match desired venting direction, score & remove appropriate 4-inch vent pipe knock out. Allow minimum of 4inches of vent of pipe to extend inside box.
8. If gas line is to be installed, locate 1⅝ straw clamp on top or bottom of box. Cut the webs between the 8 fins with a utility knife. Push the gas line through the straw clamp. The fins will flex inward holding the pipe.
9. Slide box into position taking care to correctly align vent pipe and gas pipe (if present).
10. Spacing tabs will automatically position box so that bottom, inside edge is from **2¼ to 2⅝ inches above unfinished floor** to allow clearance between trim ring and finished floor covering. Tabs may be removed if a different spacing is desired.
11. Attach one side of box directly to stud using the three flange screw holes.
12. Snap in the two mounting straps on the other side of the box and attach these to the second stud using the strap screw holes. *Screws are recommended* for mounting.

Trim Instructions:

5. **Leave 1¾ inches between inside edge of box and end of baseboard** to allow for trim ring clearance.
6. Snap trim ring into opening, no caulking required.
7. Leave unfinished or paint with desired color.

- Box made from High Impact Polystyrene ("HIPS")
- Meets UL94 HB Flammability Testing
- Install in up to 24" on center location, brackets included
- Easy to remove 4" knockouts
- Top and Bottom Straw clamps for gas pipe
- Snap on trim ring accommodates up to ¾" drywall
- US Patented Product 6,938,640

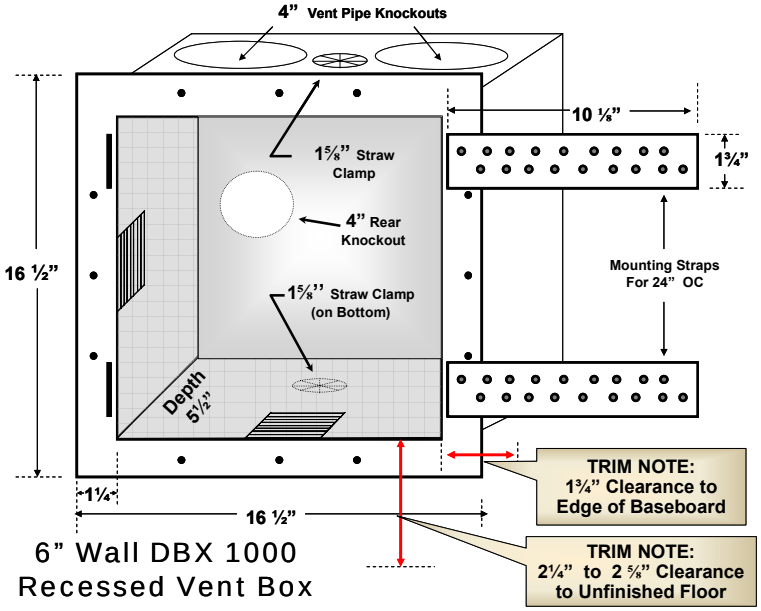
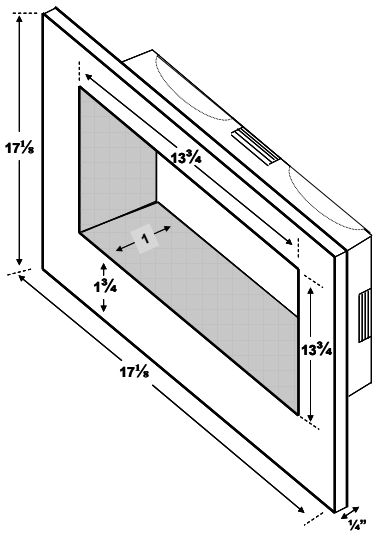
6" Wall DBX 1000 Recessed Vent Box